Intelligent Machines in Economics

- A Macroeconomic Application of The LSTM Neural Network -

Rasmus Schier

MSc Economics

Aalborg University, Denmark
rasmus.schier@gmail.com

Roman Jurowetzki

Aalborg University

Department of Business and Management, IKE / DRUID

Hamid Raza

Aalborg University

Department of Business and Management

Outline

Motivation

Methods & Model Design

Results & Conclusions

Motivation

-We used an LSTM in a macroeconomic context.

- Prediction of danish GDP growth

- Why?
  - Lag in the flow in macroeconomic information
  - Powerful pattern recognizing abilities

  - Two ways of implementation:
    - Combined with econometrics
    - Instead of econometrics

Deep Learning combined with econometrics

- Underlying data-generating role

- Economic interpretation by econometric framework

- A discussion of technical capabilities

Deep Learning versus econometrics

Web of Science: Literature on economic applications of Deep Learning

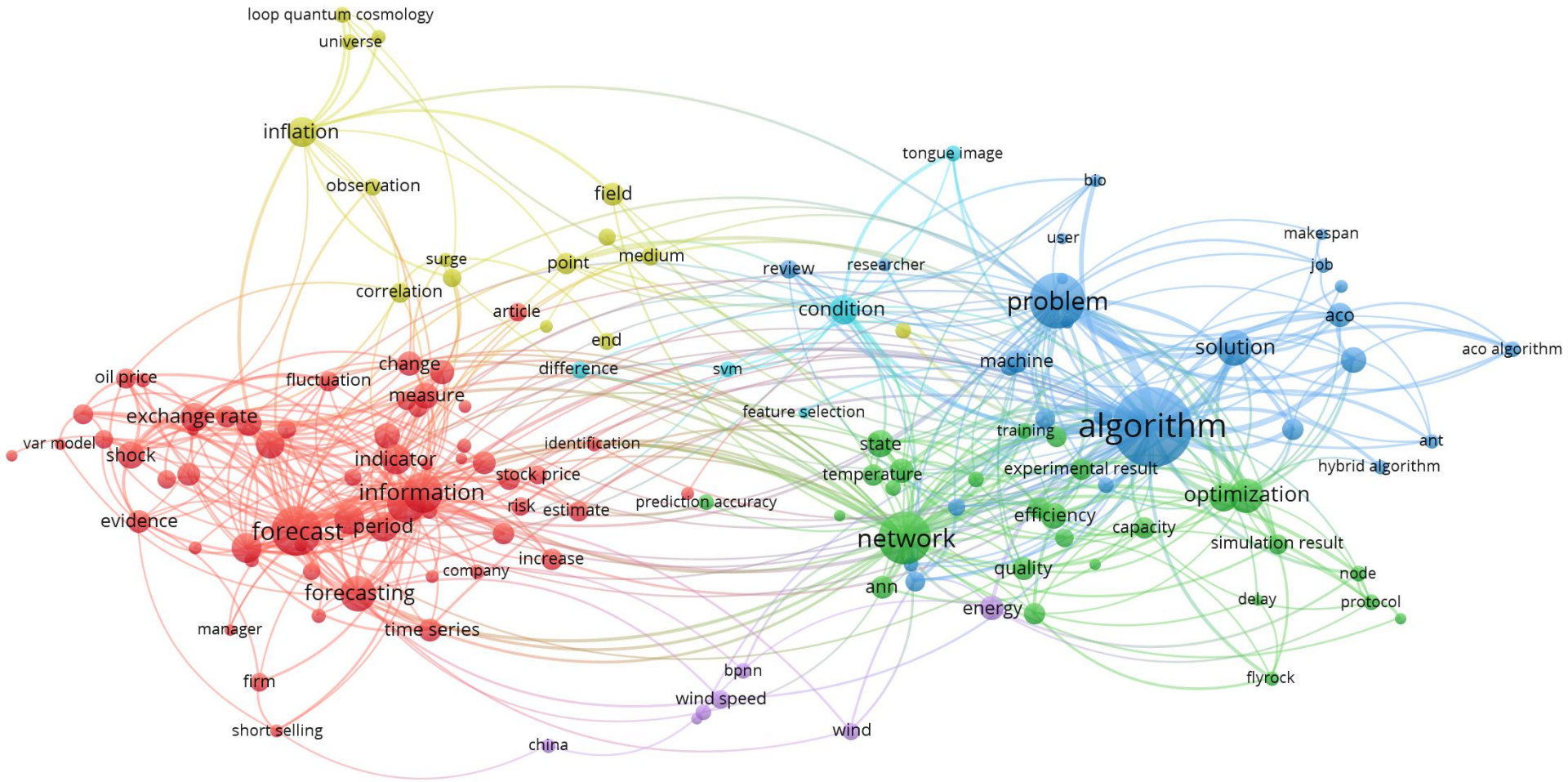

Starting from: *Y. Kuang (2017) – A novel macroeconomic forecasting model based on revised multimedia assisted bp-neural network model and ant colony algorithm*

The ”Network” keyword

- **Financial applications :** LSTM’s
- **Macroeconomic applications :** Feed Forward networks

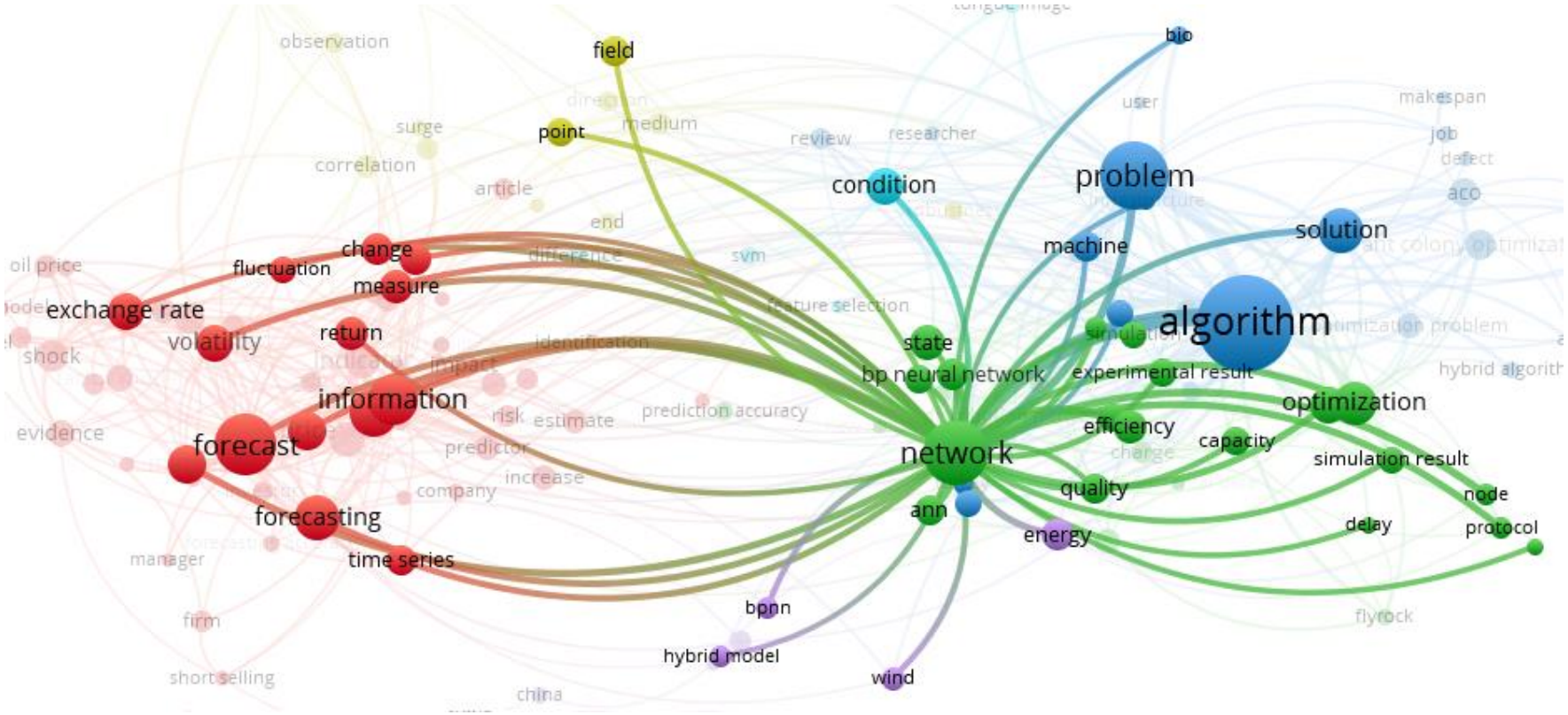

The ”Indicator” keyword

- Links primarily to economic keywords

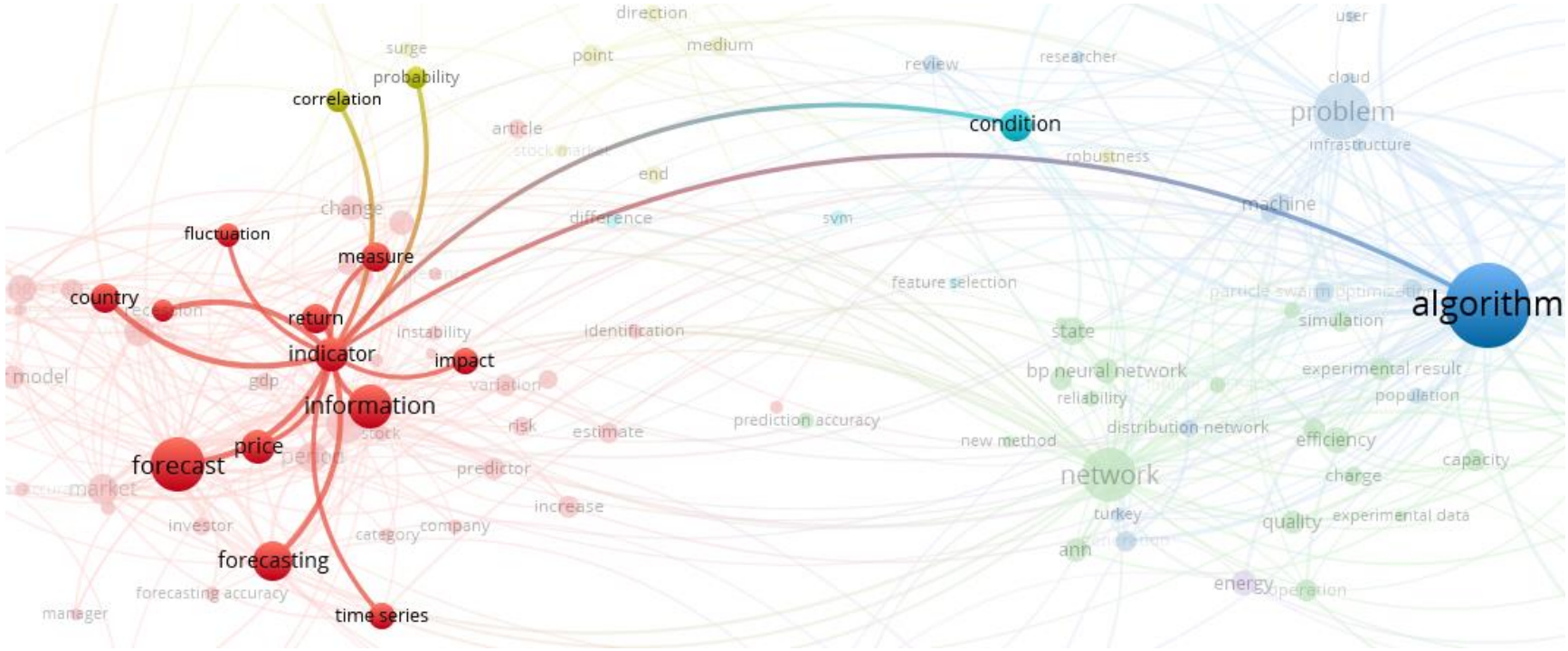

Research Question

”How well does the
Long Short-Term Memory Neural Network
perform in a macroeconomic context”

How well does the LSTM predict
GDP growth based on a series of
macroeconomic indicators for the danish economy

Method

- **Model Evaluation** Out-of-sample validation
- **Deep Learning approach:** Long-Short Term Memory (LSTM)
- **Econometric approach:** Principal Component Regression (PCR)

Data:

Indicator	Unit	Source
Gross Domestic Product	Mio. of DKK	FRED
Consumer Price Index - Total All Items	Pct. Growth - YoY	FRED
Employed Persons Age 15 and Over	1.000 Persons	FRED
Unemployed Persons - Total Harmonized	1.000 Persons	FRED
3-Month Interbank Rate	Pct. Per Annum	OECD
10-Year Long-Term Government Bond Yields	Pct. Per Annum	OECD
Total Share Prices	Index 2010 = 100	OECD
Brent Crude Oil - Global Price	USD pr. Barrel	FRED
Exchange Rate - DKK/USD	DKK to USD	FRED
Building Permits - Residential	Pct. Growth - Prev.	FRED
Total Credit - Non-Financial Corporations	Billions of DKK	FRED
Housing Prices	Index 2010 = 100	FRED
Hourly Earnings DK - Manufacturing	Pct. Growth - YoY	FRED
Hourly Earnings EU - Manufacturing	Pct. Growth - YoY	FRED
Government Consumption	Pct. Growth - Prev.	FRED
Private Consumption	Pct. Growth - Prev.	FRED
Import of Goods & Services	Mio. of DKK	DST
Export of Goods & Services	Mio. of DKK	DST
Balance of Trade	Mio of DKK	DST

- **18 Commonly used indicators**
- **Picked with reference to different nowcasting article**
- **Swith strong reference to "Economic Outlook", by the danish central bank**
- **92 observations**
- **Difference stationary**

Model Evaluation

- Out-of-sample validation

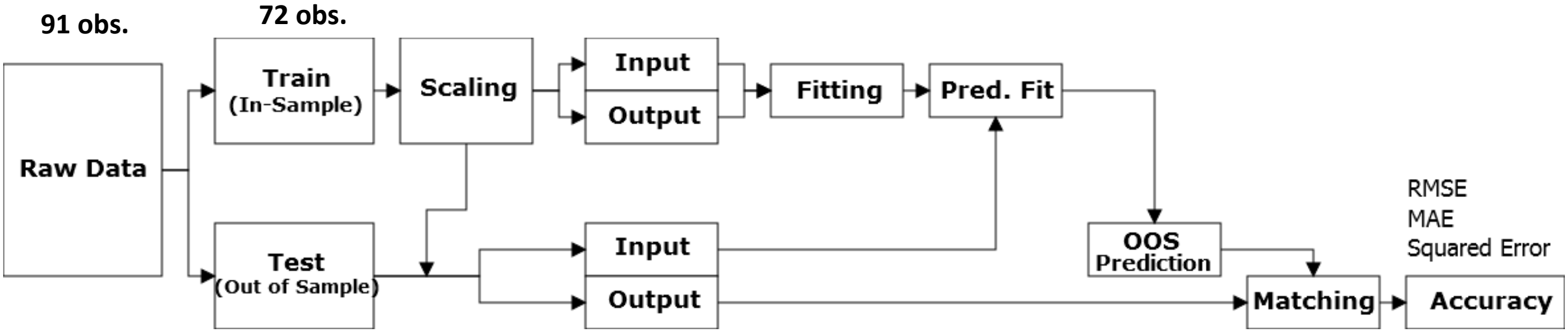

Deep Learning Approach

Long Short-Term Memory Block with a Forget Gate

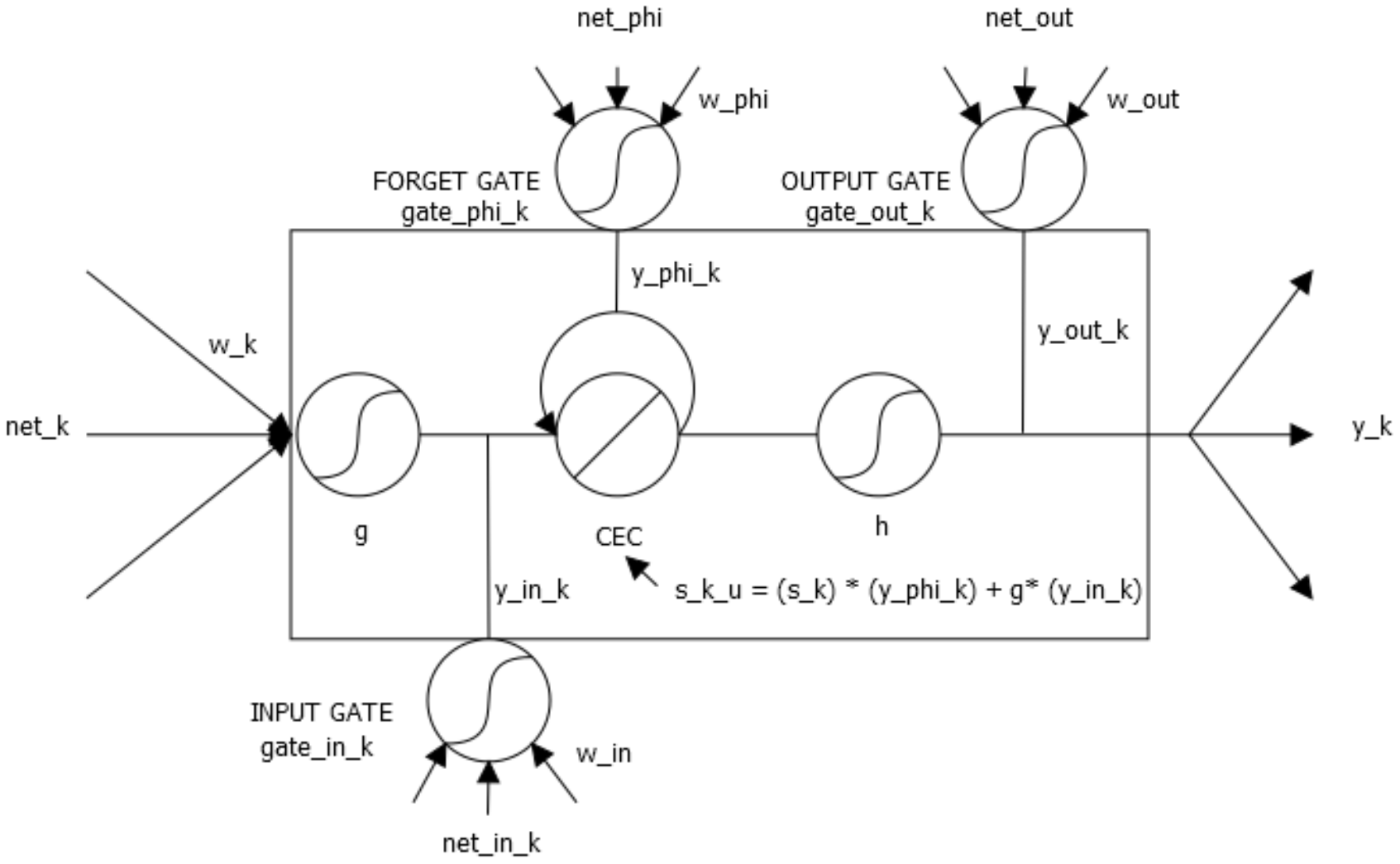

Sequence Design

GDP Growth

- All indicators are matched to GDP growth of same time-step

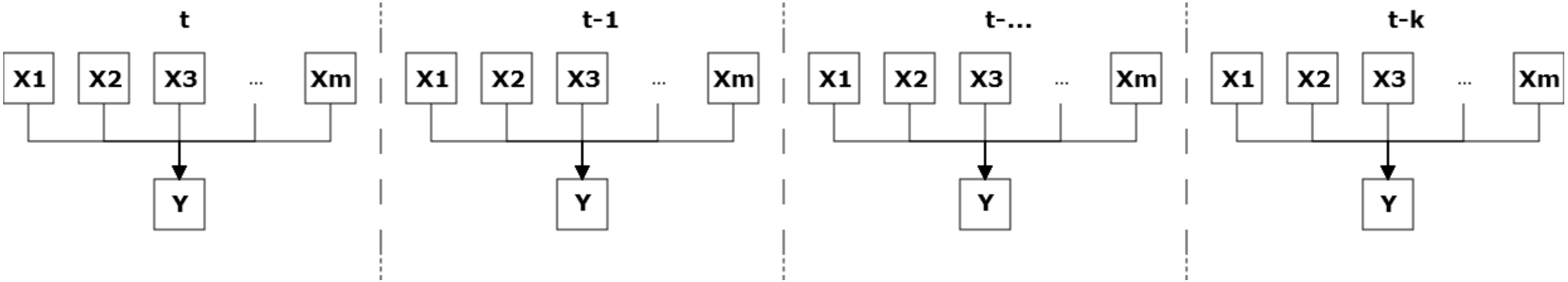

Network Design

- 1 LSTM block: 19 units
- 1 output layer: 1 neuron

- **Epochs:** 150
- **Activation:** Rectified Linear Unit (ReLU)
- **Loss:** Mean Squared Error (MSE)
- **Optimizer:** Stochastic Gradient Descent (SGD)

Econometric Approach: PCR

- The idea behind a Dynamic Factor Models:

$$X_t = \Lambda(L)F_t + e_t$$

- Components are assumed to be linear combinations of inputs:

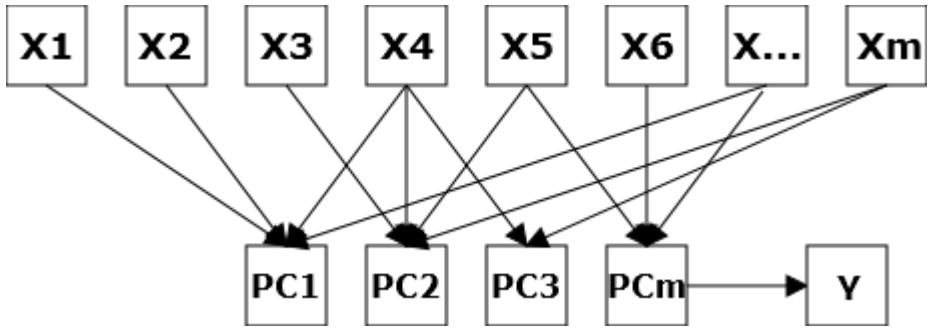

PCR Design

- Cross-Validation Approach similar to Giovanelli and Proietti (2014)

First 5 components results in lowest CV-error

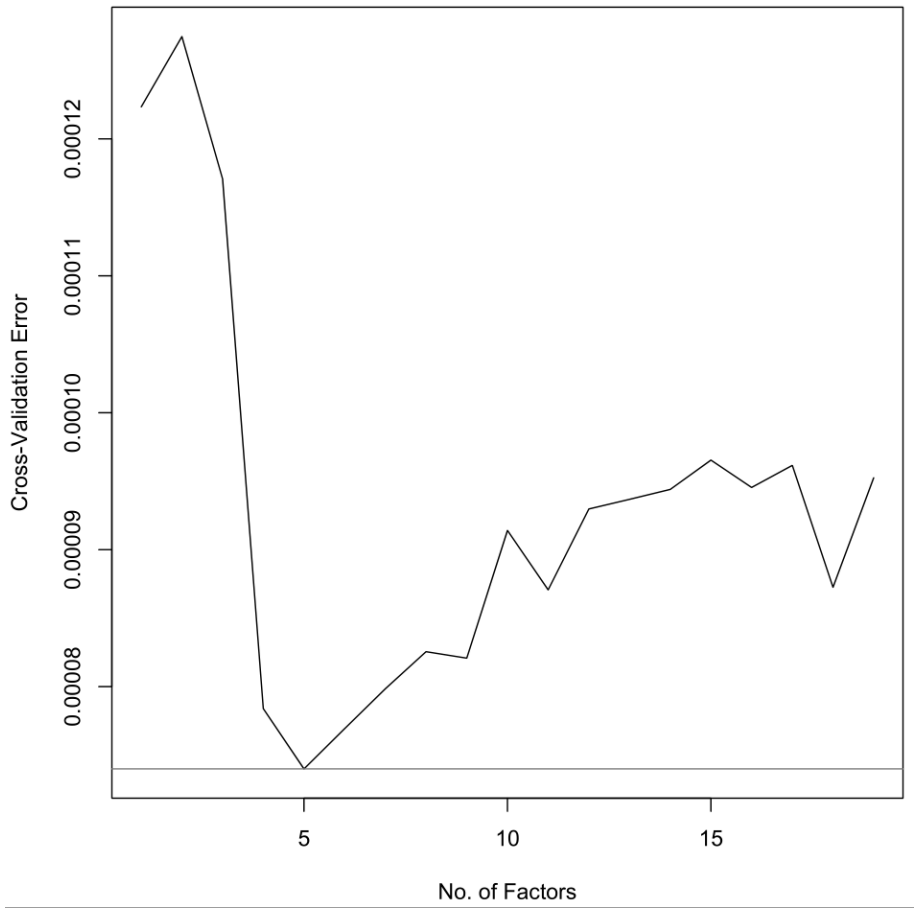

No. of components	Error
5	**7.292008e-05**
11	7.571166e-05
18	7.513744e-05

Bold: The lowest (best) error

Results

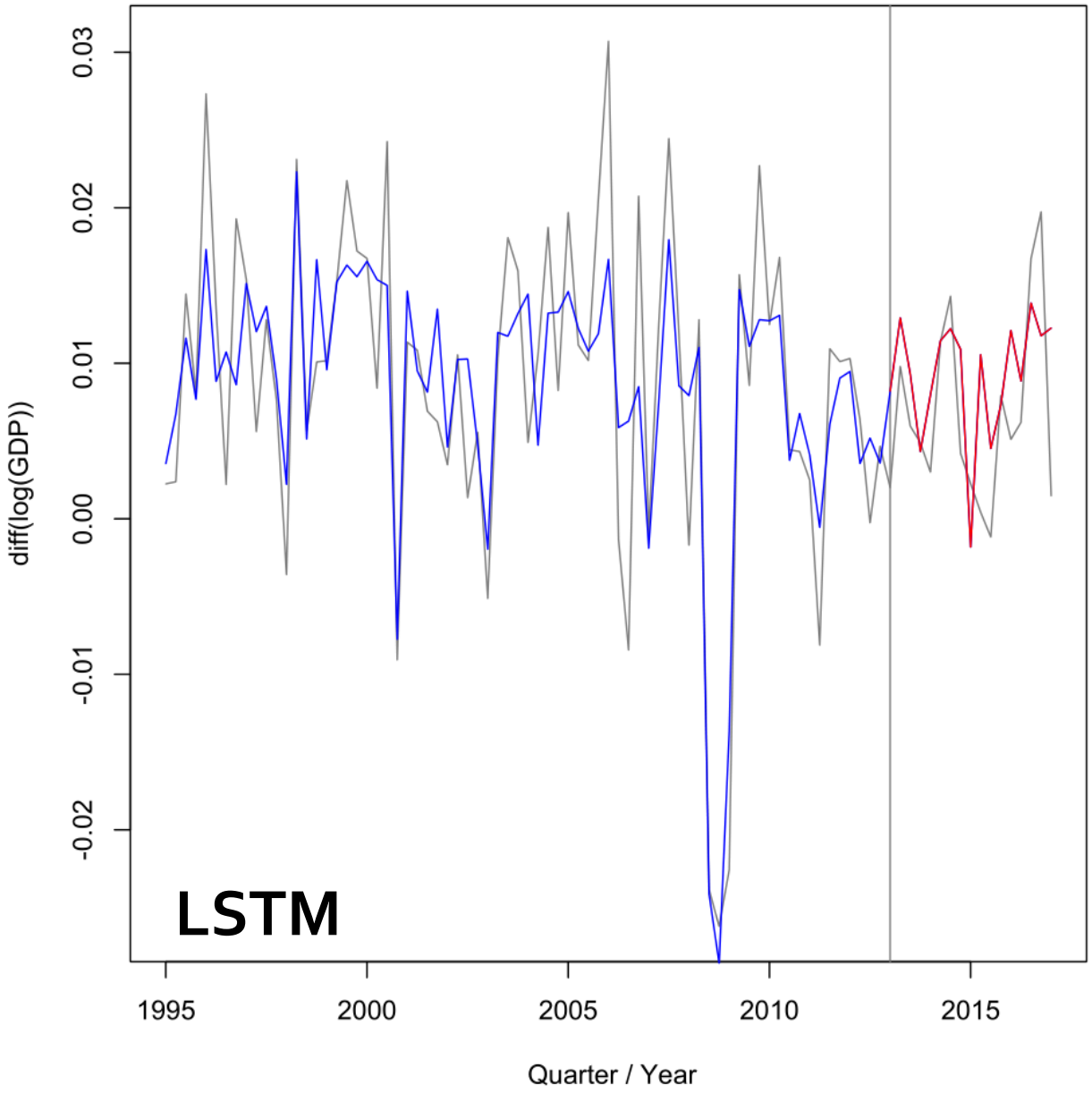
LSTM
diff(log(GDP))
0.03
0.02
0.01
0.00
-0.01
-0.02
1995
2000
2005
2010
2015
Quarter / Year

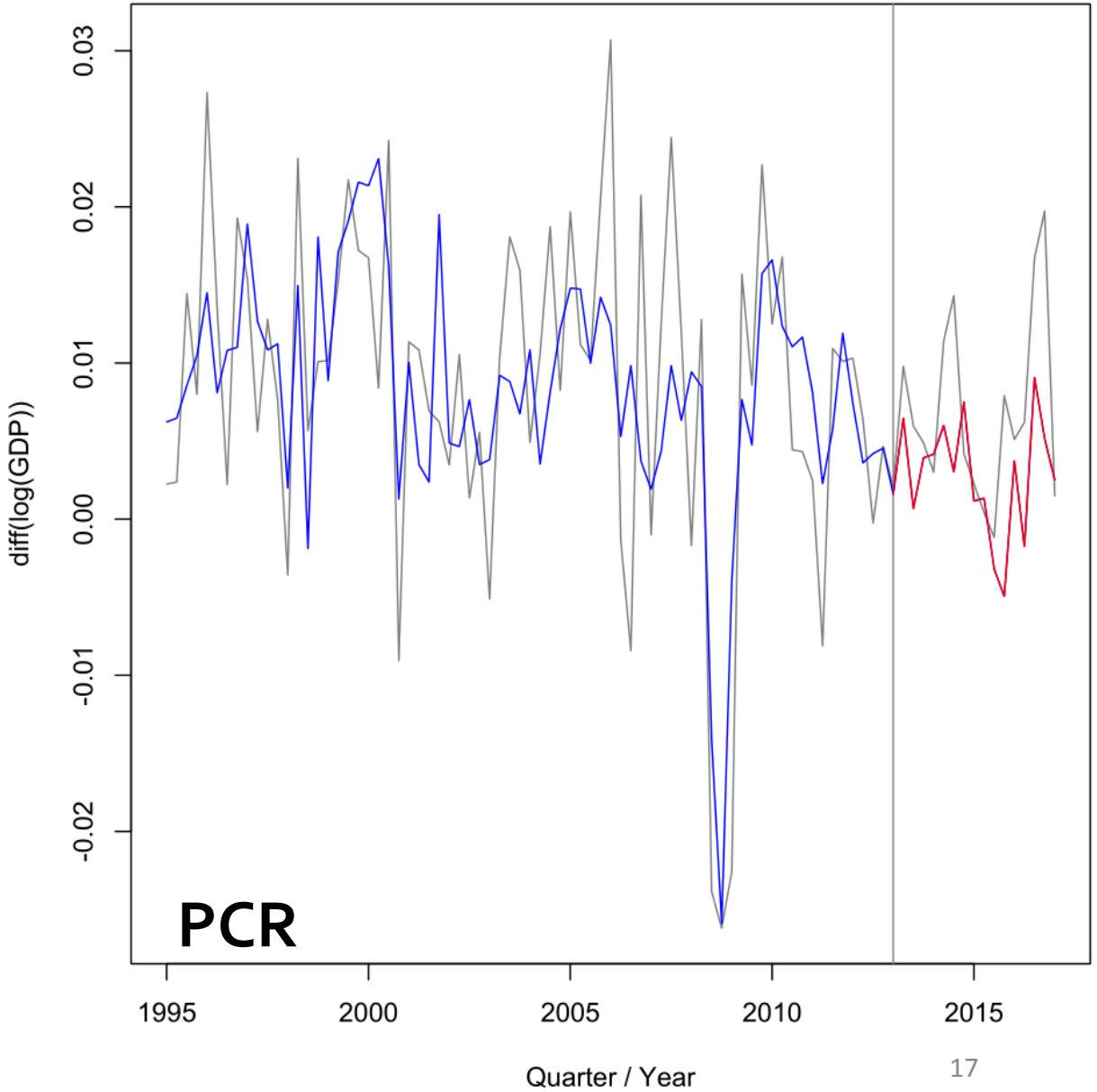
PCR
diff(log(GDP))
0.03
0.02
0.01
0.00
-0.01
-0.02
1995
2000
2005
2010
2015
Quarter / Year

Accuracy

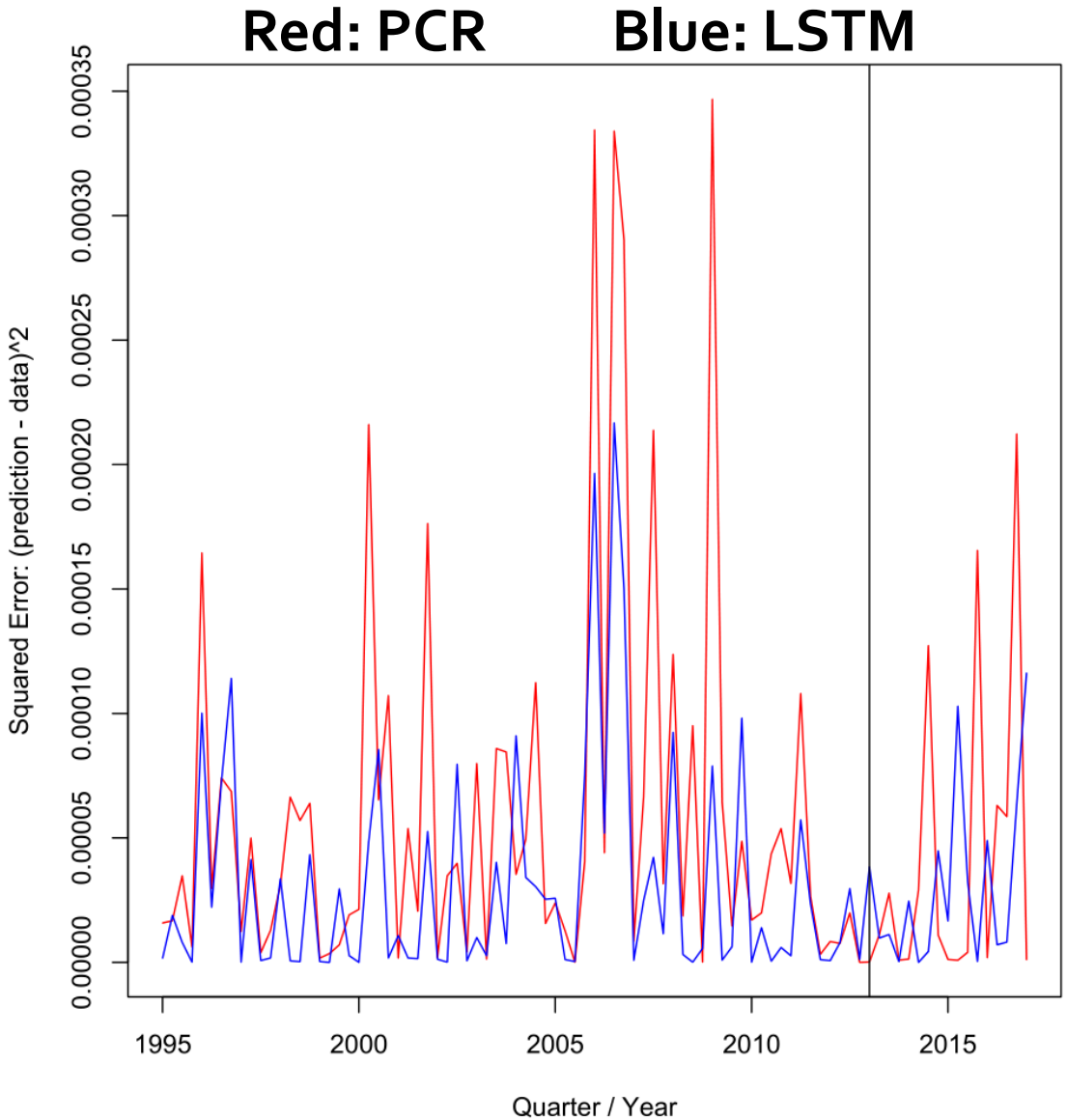

- LSTM shows lower RMSE and MAE in out-of-sample prediction

- Diebold-Mariano: $p > 0.001$

Model	RMSE	MAE
LSTM	0.005584161	0.004289430
- Training	0.005584284	0.004207058
- Out-of-sample	**0.005583643**	**0.004638299**
DFM	0.007582204	0.006169701
- Training	0.007816738	0.006506790
- Out-of-sample	0.006495667	0.004742028

Bold: The lowest (best) metric

Conclusions

How does the LSTM perform?

- The same as our PCR in this specific scenario

- Structural inference is native to econometrics

- Deep Learning has strength in its ability to extract information from non-traditional sources.

References:

Gers, F. A., Schmidhuber, J., and Cummins, F. (1999). *Learning to forget: Continual prediction with lstm*

Varian, H. R. (2014). *Big data: Net tricks for econometrics*

Fischer, T. and Krauss, C. (2017). *Deep learning with long short-term memory net- works for financial market predictions*

Glorot, X., Bordes, A., and Bengio, Y. (2011). *Deep sparse rectifier neural networks*

Stock, J. H. and Watson, M. W. (2002). *Forecasting using principal components from a large number of predictors.*